POLAM-REM S.A.

Outside Wall Light, Balcony, 1x18W/1x26W

SLP 98

IP 67

230V 50Hz

G24d-2

G24d-3

Type	Light source	Light source power / lamp base	Weight
SLP 98 - 1180	tubular compact fluorescent lamp	1 x 18 W / G24d-2	1,8 kg
SLP 98 - 1260		1 x 26 W / G24d-3	2,0 kg

Approvals
according to the rules of relevant classification societies, additional IEC

Housing
stainless steel, powder coated white

Diffuser
polycarbonate, opal

Lamps (not included)
tubular compact fluorescent lamp 18W/26W

Electric
flexible wiring
heat resistant up to +105°C

Cable entry
2 cable glands PG 13,5
cable max ø 12 mm

Mounting
4 mounting holes ø 6 mm

Electrical connection
see finish section

9.03

[mm]

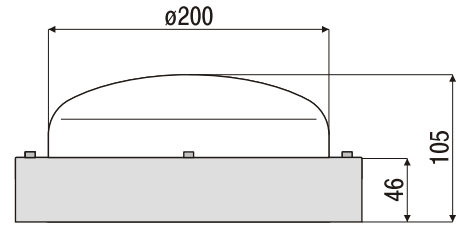

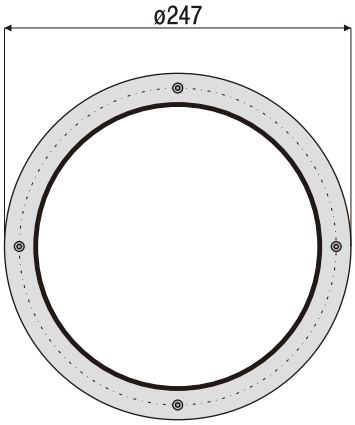

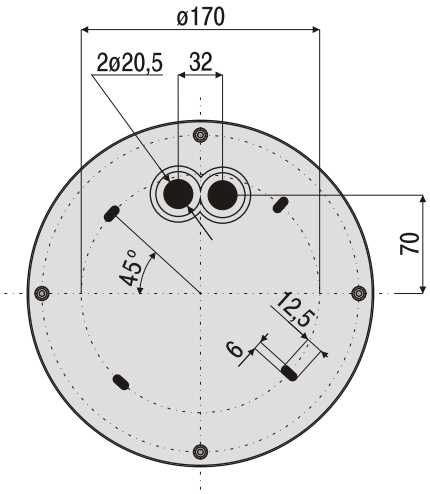

OPTIONS

220V 60Hz | 230V 60Hz | 120V 60Hz

240V 50Hz

Electronic Ballast	220V-240V 50Hz-60Hz	220V-240V DC

Emergency Lampholder B15d

PolamRem

POLAM-REM S.A. 80-531 Gdańsk ul.Sucha 25
tel. +48(0-58) 520-74-00 fax +48(0-58) 343-26-29
www.polam-rem.com.pl; polamrem@polam-rem.com.pl

Technical modification reserved without prior notice

Outside Wall Light, Balcony, 1x18W/1x26W

POLAM-REM S.A.

Order Specification

Type | Screen | Options

SLP 98 - x x x x / x x / x x / x x x x

1 x 18 W - **118**
1 x 26 W - **126**

230V/50Hz - **0** /standard/
220V/60Hz - **1**
120V/60Hz - **2**
240V/50Hz - **3**
230V/60Hz - **5**

Emergency lighting
B15d - emergency lampholder B15d

Electronic ballast
E - 220 - 240V / 50-60 Hz
E1 - 220 - 240V DC

HM - with halfmoon
FM - with fullmoon

Example of type description
SLP 98 - 1180 light fitting for one tubular compact fluorescent lamp 18W with socket G24d-2; supply voltage 230V/50Hz

Spare parts for batten luminaire SLP 98 - 1180

No.	Spare parts	Part-no.
1	Diffuser PC, opal	101 00 98118
2	Lampholder G24d-2	011 00 98118
3	Ballast	031 00 98118
4	Capacitor	021 00 98118

PolamRem
POLAM-REM S.A. 80-531 Gdańsk ul.Sucha 25
tel. +48(0-58) 520-74-00 fax +48(0-58) 343-26-29
www.polam-rem.com.pl; polamrem@polam-rem.com.pl

Technical modification reserved without prior notice